Journal of Civil Engineering, Science and Technology

Volume 13, Issue 1, April 2022, 69 – 79

ASSESSMENT OF FLOW CHARACTERISTICS ALONG THE HYDRAULIC PHYSICAL MODEL OF A DAM SPILLWAY

Thiennieesh Manogaran[1], Mohd Remy Rozainy Mohd Arif Zainol[1*], Muhammad Khairi A. Wahab[1], Mohd Sharizal Abdul Aziz[2] and Nazirul Mubin Zahari[3]

[1]School of Civil Engineering, Universiti Sains Malaysia (USM), Penang, Malaysia
[2]School of Mechanical Engineering, Universiti Sains Malaysia (USM), Penang, Malaysia
[3]Department of Civil Engineering, Universiti Tenaga Nasional (UNITEN), Putrajaya, Malaysia

Date received: 01/03/2022 **Date revised:** 16/03/2022 **Date accepted:** 17/04/2022 **Date published:** 26/04/2022
*Corresponding author's email: ceremy@usm.my
DOI: 10.33736/jcest.4550.2022

Abstract — Water flowing over a spillway has a very high kinetic energy because of the conversion of the entire potential energy to kinetic energy. This circumstance results in damage or significant erosion at the toes of the spillways, weir bed, and downstream of a river. To solve this problem, the water flow velocity must be minimised. Physical modelling was implemented to this conundrum in order to modify the current energy dissipating structure, the stilling basin, to enhance energy dissipation as much as achievable by downstream velocity reduction. Baffle blocks were adopted as the modification in this study because these are widely used to stabilize the jumps, shorten its length, and maximize energy dissipation. A selection of baffle arrangements was evaluated by positioning them in the stilling basin's mid-span to identify the most effective outcome in minimizing downstream velocity. From the findings, it was clearly shown the arrangement of baffles blocks at the stilling basin impacts velocity reduction in various discharge cases. The formation of cross-waves was also assessed at the discharge channel at every discharge value with its relative distance from the sump and the width of the channel prior to the site. For discharge situations of 70.0 L/s and 100.0 L/s, modifications to the Type II stilling basin were recommended. Furthermore, constriction, expansion, or curvature should be avoided in chute spillways identical to the dam spillway to limit cross-wave generation and other unfavourable flow behaviours.

2462-1382 / © 2022 The Author(s). Published by UNIMAS Publisher. This is an open access article under the CC BY-NC-SA 4.0 license (http://creativecommons.org/licenses/by-nc-sa/4.0/).

***Keywords*:** stilling basin, spillway, dam, baffle, energy dissipation, flow behaviour

1.0 INTRODUCTION

Dams are built as water storage facilities to accommodate sudden changes in the catchment area and to generate electricity. Effective operation of existing water infrastructures is considered essential for the efficient use of water supplies [1]. Dam breaks can occur due to inadequate spillway capability, structural fatigues and flaws, unstable slopes, earth slides, seepage, overtopping, and earthquakes. To avoid the occurrence of breaking of dams, the spillway is designed to release and regulate the stream of floods. Due to the heavy flow discharge over the spillways, their structure and construction are very sophisticated, and they typically face difficulties such as cavitation and high flow kinetic energy. Pumping air next to the spillway surface with aeration systems mounted on the spillway bottom and on the sidewalls is a common procedure to avoid cavitation and erosion of the spillway surface [2]. Moreover, streaming of water through the spillways generates high velocity and high energy at the toe of the spillway. This high velocity causes a severe force that can cause damage in the form of erosion to the downstream channel of the spillway, resulting in the scouring of the channel bed and sides, and continue to raise the depth of the scour at the toe of the spillway [3]. Speaking of the spillway, spillways are concrete-based hydraulic structures in dams, to control the water discharge into the downstream waterway in order to prevent overtopping of the dam. It has the adequate capacity to act as temperance of floods because it has to be sized hydraulically to ensure that the flood water safely passes through an equivalent or less than the Probable Maximum Flood (PMF) required [4]. Spillway can be operated in either two ways which are controlled and uncontrolled mechanisms. Five basic components that the spillway is made of are control structure, discharge carrier, energy dissipator, inlet and outlet channels [5]. The position or location of the spillway structure plays an important role for an efficient operation to pass the designed flood without overtopping the dam and also provides structural integrity throughout the design life of the dam [6]. Due to these reasons, spillways are usually placed near a diversion weir since it is known for its high hydraulic efficiency as well [7]. Spillway flows are typically associated with energy dissipations since a

number of hydraulic processes take place such as the presence of friction along the spillway which then substantially upsets the flow energy in the form of flow turbulence and interactions [8]. Dissipation of the energy in the flow is caused by the formation of vortex where the regime changes due to jet intrusion in the inter-facing device when coming in contact with a solid body hydrodynamically [9].

The dam has a chute-type spillway to control the reservoir supply level. A chute spillway consist of a crest and a sloping discharge outlet, is a critical facility used to avoid overtopping and release flood surge [10]. Water spillage events have occurred over the years at where the water level has exceeded the normal water level of the dam. However, the stream of water from the uncontrolled no-gate spillway towards the downstream channel is usually high in velocity and kinetic energy. If appropriate steps are not taken, the discharged water flow exceeds high velocities where constant low pressures, can cause cavitation damage to the spillway [11]. Furthermore, if the spillway invert and sidewalls are exposed to constant removal of surface soil, the dam structure's stability could be jeopardized.

2.0 MATERIALS AND METHODS

2.1. Experimental Setup

For this study, the flow characteristics of the dam spillway was assessed and suitable energy dissipater was designed by physical modelling. The spillway of the dam was built to a distorted 1:50 scale which included the main dam, dam station, substation, spillway, power station and topology as shown in Figure 1.

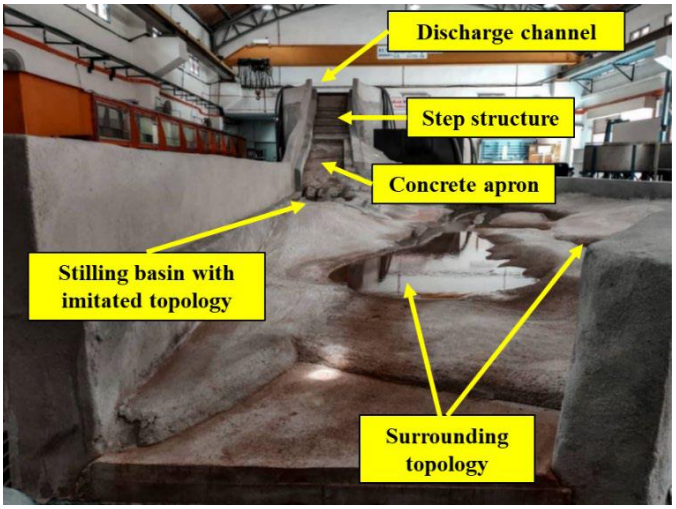

Figure 1 Dam spillway model

Before beginning the experiment, many issues were considered, including movement constraints, device functionality and precision, and selecting appropriate measurement points. The measurement points were chosen at random along the spillway model. A total of six segments were created which include the discharge channel **(P1)**, flat steps **(P2)**, concrete apron **(P3)**, chute blocks **(P4)**, mid-span **(P5)** and end sill of the stilling basin **(P6)** as shown in Figure 2. The segments were labelled with white thread to make the data collection process easier and to prevent repeating data collection at the same point or collecting data from unmarked points, which can lead to inaccuracies in the data collected. The sumps below the model were pumped with water before half of the sump level prior to the running test. The spillway model was powered by 10-pump systems, and a running test was performed to ensure the model was safe to operate.

The first stage of the study was to collect the velocity at required discharge values along the points (P1 to P6) in the spillway model. Then, the modification needed for energy dissipater, which was the stilling basin was discussed and determined. Revision of the modification was done until the velocity met the expected values. In reality, the spillway produced a massive volume of water to be discharged from the reservoir in a short period of time, resulting in a stream of a very high discharge and velocity. The increased flow rate caused a much higher bed shear stress, resulting in considerably increased sediment movement downstream of the structure, which became degraded as a

result, a phenomenon known as local scour. Successive or persistent scouring would undermine the spillway's structure, eventually contributing to the structure's failure. Hence, the modification was required to existing stilling basin focused in reducing the kinetic energy and enhancing the energy dissipation rate. The second stage of the study was to analyse the data collected for the flow velocity using simulation through software, Surfer 3D. Surfer 3D, developed by Rockware was a Microsoft Windows-based contouring and three-dimensional terrain mapping software program. Surfer was used widely for groundwater modelling, geochemical elements mapping, archaeological survey and etc. For this study, contour mapping was used to assess each point of the spillway.

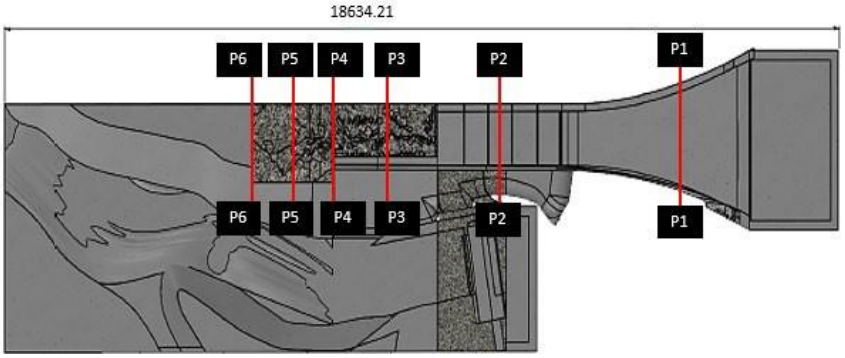

Figure 2 Points selected for measurement in the spillway model

2.2 Modification of Energy Dissipater Design

A suitable energy dissipater is necessary to be implemented because it can diminish the high energy entering the downstream channel as well as reduce its velocity. Thus, reduction in velocities and kinetic energy with high air entrainment reduce the risk of cavitation in these hydraulic structures [12]. For the modification, baffle block was chosen since it had been widely used to stabilize the jump and dissipate energy due to impact actions. The configuration and dimensions of the baffle blocks followed the recommendation of the United States Bureau of Reclamation (USBR), with the essentially longitudinal dimension and width of the block chosen in general focused on the block`s height [13]. Figure 3 depicts the model of baffle block used in the experimental work.

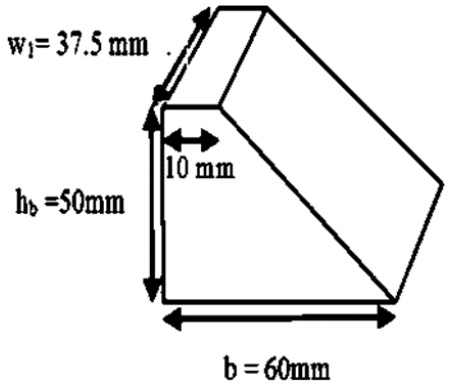

Figure 3 Standard USBR Baffle Block

A single row of baffle blocks was positioned at the centre of the stilling basin, which is at 70cm, and the interval between each block was 3.75cm, which corresponds to the width of the baffle blocks. A double row baffle block configuration is identical to the single row arrangement where the first and second rows were separated by 10cm. Furthermore, as depicted in Figure 4, the arrangement of the second row of blocks were aligned with the block

gaps of the first row. In terms of the experimental part, the velocity and height of the hydraulic jump at P5 were recorded for each baffle bock arrangement for all discharge cases. Until testing, the blocks were adhered to the basin with silicone sealant and left to dry for the preparation phase.



(a) (b)

Figure 4 Baffle block arrangement in (a) Single row and (b) Double row

3.0 RESULTS AND DISCUSSION

3.1. Velocity Profile

The velocity ranges are presented in Figure 5 for each discharge cases at each point of the spillway. As stated from the figure when the flow rate increased, the velocity increased as well at each point. The velocity of P1 was lower than in P2 at each discharge cases due to the change in cross-sectional area from P1 to P2 where it began to narrow down, and the sub-critical flow became supercritical moving towards the downstream. However, the velocity was found to decrease gradually from P2 to P4 since the flat steps structure acted as roughness elements to minimise flow acceleration and thus terminal velocity, allowing for shorter downstream basin span [14]. However, when the velocity reached P5 especially at the discharge cases of 70.0 L/s and 100.0 L/s, a sudden spike of velocity was observed compared to the 50.0 L/s. From this comparison, it clearly indicated that the existing stilling basin of the physical model was effective in the reduction of downstream velocity and high energy dissipation at a maximum discharge of 50.0 L/s. Thus, modification was needed to improvise the existing stilling basin model to reduce the downstream velocity, especially at the discharge cases of 70.0 L/s and 100.0 L/s.

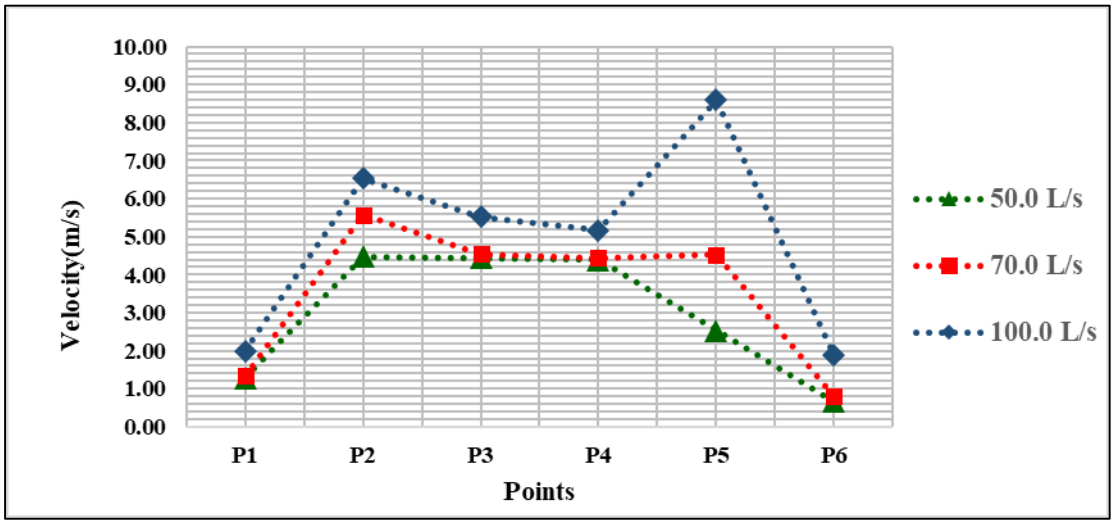

Figure 5 Velocity comparison for each discharge cases

3.2. Velocity Profile using Surfer 3D

Surfer 3D software was used to observe the transition of the velocity from the upstream till the downstream of the physical model by interpolating values into the Surfer 3D model through Gaussian Regression Process or commonly known as Kriging Method. It is a geostatistical gridding approach that has proven effective and popular in a wide range of applications. This approach created aesthetically pleasing maps from data that were unevenly spaced. Kriging seeked to convey patterns from the input data, so that high spots, for example, were joined along a ridge rather being totally isolated by the bull's-eye type contours. It was found on adaptable gridding approach. The Kriging defaults can be used to generate an accurate grid and tailored to a specific data set by supplying the suitable variogram model. Kriging in SURFER 3D could either produce an exact or a smoothing interpolator, depending on the user-specified settings. It efficiently and naturally incorporated anisotropy and underlying patterns [15].

As such, it was found the velocity was low at P1 region and it gradually increased until P4 for the velocity contouring in Figure 6. However, the velocity is maintained in the range in between 4 to 5 m/s. Once it reached the P5 and P6, there was a gradual reduction in the velocity at the downstream. This indicated that at 50.0 L/s, the stilling basin was able to effectively reduce the velocity of the downstream. For 70.0 L/s, the velocity at the P1 region, the velocity was higher than in the previous case of 50.0 L/s. Moreover, the velocity seemed to drastically increased from P2 onwards. Besides the velocity on the left of the dam was slightly higher than the right in between P2 and P3 regions since the flow started to shift towards the right-side of the apron as illustrated in Figure 6(b). At P4 to P6, there was no reduction on velocity especially at P5 which was the mid-span of the stilling basin. This indicated that the flow at the downstream was quite turbulent and contained more kinetic energy with less energy dissipation rate.

Moving on to 100 L/s as illustrated in Figure 6(c), the velocity contour was almost similar to the 70.0 L/s, but the flow in this discharge case was quite violent even at P1. Red spots are found mainly between P2 and P3 as well at P5 indicating the downstream velocity was almost reaching 8 m/s. These reddish spots are quite dangerous since it could cause damages at the stilling basin severely. The downstream leaving the stilling basin also was quite high which also could lead to severe erosion and scouring to the riverbed.

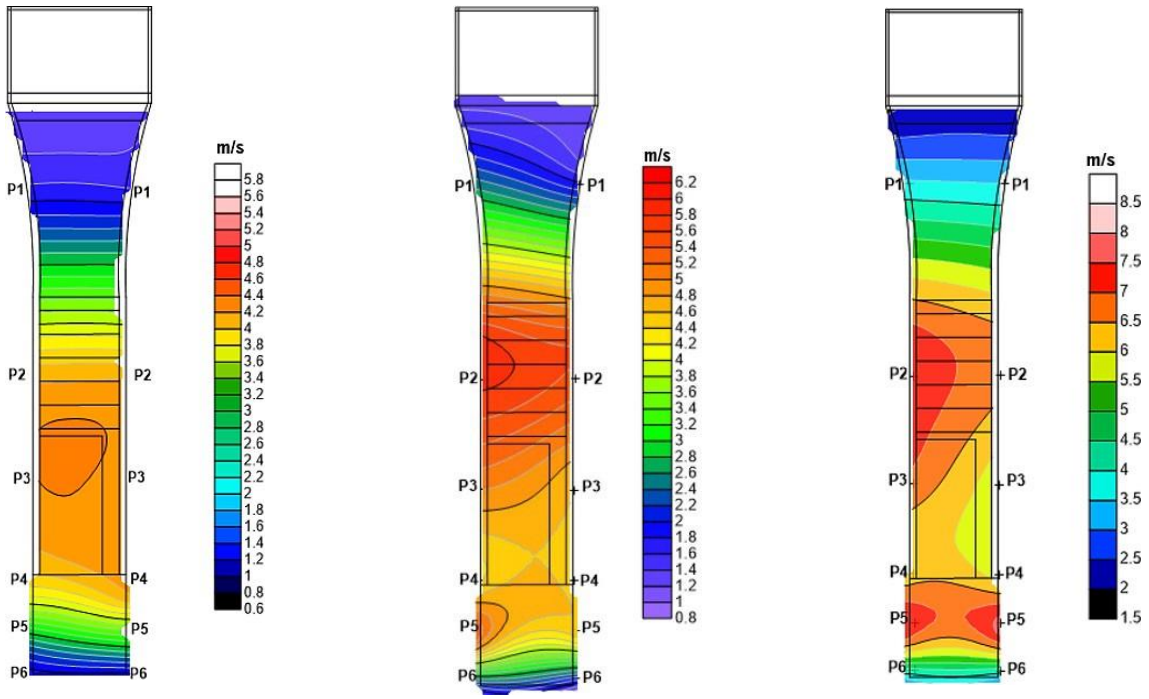

(a) (b) (c)

Figure 6 Velocity contour profiles for (a) 50.0 L/s (b) 70.0 L/s (c) 100.0 L/s

3.3. Hydraulic Jump Formation and Location

For each discharge case, the location and the height of the hydraulic jump formation varied with each discharge case as in Figures 7, 8 and 9. The variations in the height of the hydraulic jumps could be seen in Table 1 below for each discharge case. For the case of 50.0 L/s, the hydraulic jump location was maintained within the mid-span of the stilling basin which reduced and stabilized the velocity of the downstream and also induced an effective energy dissipation rate. But when the discharge increases, it was found the hydraulic jump shifted towards the end of the basin. This could be probably due to insufficient depth of the basin which made it difficult to stabilize and maintain the formation of hydraulic jump within the stilling basin when the flow exceeded 50.0L/s [16]. Hydraulic jump was found to form beyond the stilling basin and can cause severe erosion and scouring of the riverbed.

Table 1 Height of hydraulic jump according to discharge cases

Discharge cases (L/s)	Heigh of hydraulic jump (cm)
50.0	18.0
70.0	28.5
100.0	35.0



Figure 7 Hydraulic jump formation for 50.0 L/s



Figure 8 Hydraulic jump formation for 70.0 L/s



Figure 9 Hydraulic jump formation for 100.0 L/s

3.4. Flow Velocity Comparison and Baffle Block Arangements

The velocity for each block arrangement was measured using Nixon velocity meter at mid-span of the stilling basin (P5). Figure 10 showed the velocity comparison according to block arrangements and discharge cases. As presented in Figure 10, the velocity decrease was considerable for all discharge situations, notably for the instances of 50.0 L/s and 70.0 L/s, where the velocity was reduced to almost 0.5-1.0 m/s. As for the 100.0 L/s discharge case, the reduction was insufficient, as the maximum velocity reduction after implementing the double row baffle block was still greater than 1 m/s. However, the double-row baffle blocks were more effective than the single-row baffle blocks because of the higher impact energy, which caused the water masses to collide more and lose energy, thus lowering the velocity. Furthermore, the double-row baffle blocks were made up of a continuous arrangement of blocks that eliminated the presence of apertures that impeded the high turbulent velocity jet before the water flowed downstream.

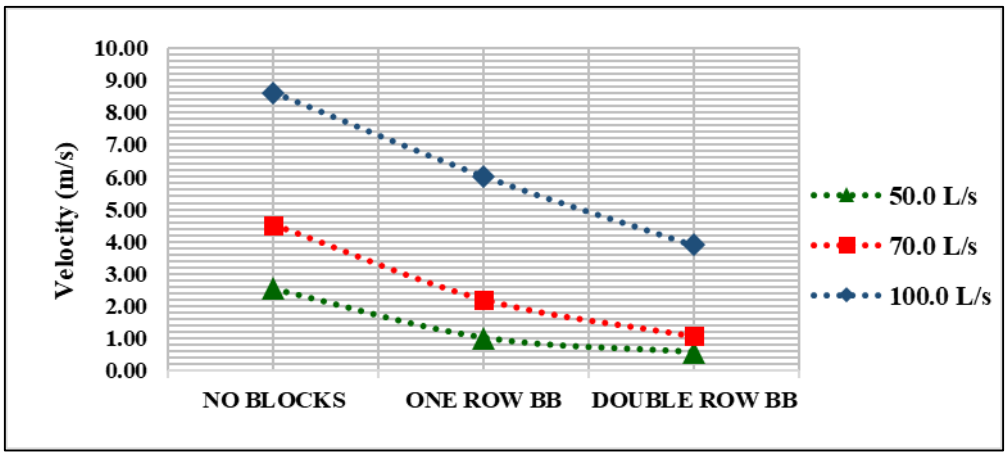

Figure 10 Velocity comparison at P5

3.5. Hydraulic Jump Comparison and Baffle Block Arangements

The height of the hydraulic jump was also measured during the experiment for each block arrangement. The data were measured at mid-span of the stilling basin (P5). Figure 11 showed the height comparison for each block arrangement under different discharge cases. The hydraulic jump height was reduced slightly after the blocks were utilized for each block arrangement, and the position of the jump remained constant in the stilling basin throughout the experiment. However, because of the similar size of the baffle blocks utilized in the experiments, the heights

of the jump before and after blocks were extrapolated to be consistent for all discharge scenarios. A slight reduction in the height of the hydraulic jump height after the blocks were observed for each block arrangement and location of the jump remained steady in the stilling basin during the experiment. But overall, the height of the jump before and after the blocks were deduced to be similar for all discharge cases due to the similar size of the baffle blocks used for the experiments. The initial height of the hydraulic jump from Table 1 before placing the baffle blocks is higher due to the location hydraulic jump to form beyond the stilling basin.

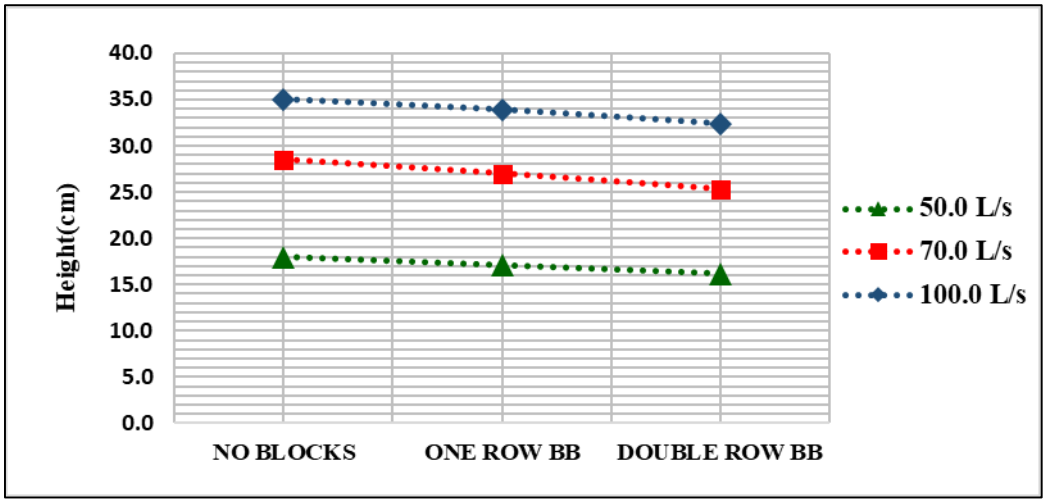

Figure 11 Hydraulic jump comparison at P5

3.6. Formation of Cross-Waves

Cross-waves are a combination of waves from two directions intersecting along the sidewalls. It was identified during the experiment at the discharge channel of the cross-wave formation with its relative distance from the sump and the width of the channel prior to the site as shown in Figures 12, 13, and 14. Cross waves were primarily caused by the geometry of the alignment and the contraction width of the channel. The cross-wave formation and related distance from the sump were longer with lower discharges. As the discharge increased, the cross-wave creation and distance from the sump decreased. Furthermore, when the discharge was increased, the location of the cross-waves shifted from the left to the right side. This was due to the non-uniformity of the flow and geometry of the transition, as well as the constriction of the channel's width [17]. Furthermore, side-wall convergence was another aspect that contributed to flow complexity in the form of cross-waves [18]. The geometrics of the sidewalls had a substantial impact on the flow pattern; in other words, the flow formation at the entrance of the approach channel was significantly influenced by its geometrics [19]. As a result, optimal design of the side wall geometry would eliminate non-uniformity flows and cross waves at the guide wall entry. In practice, if no air bulking or cross waves are incorporated with the side wall geometry design, the flow depth may grow, causing the dam to overtop.

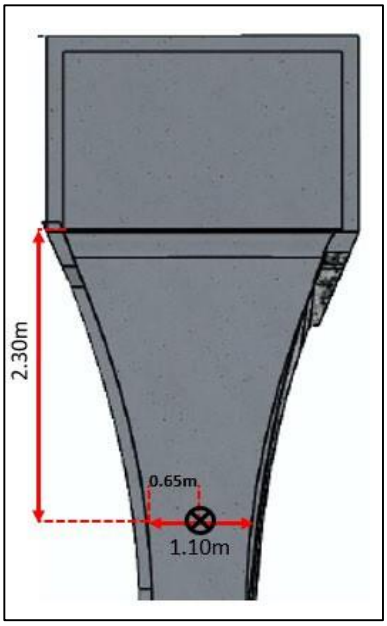

Figure 12 Location of cross-waves at 50.0 L/s

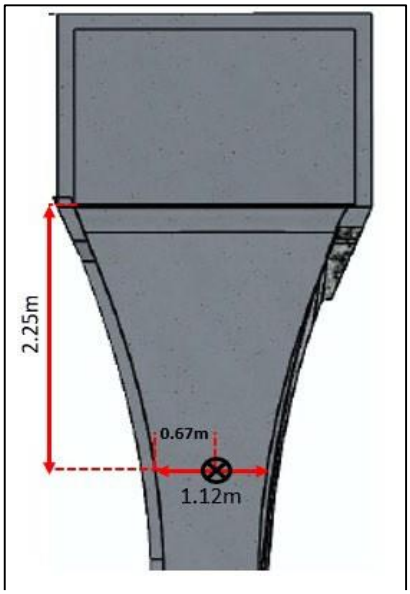

Figure 13 Location of cross-waves at 70.0 L/s

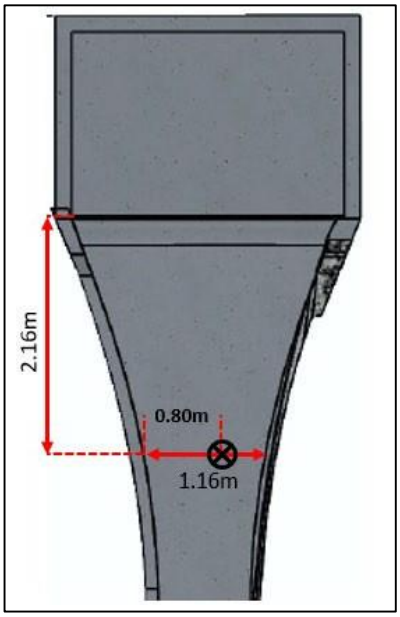

Figure 14 Location of cross-waves at 100.0 L/s

3.7 Recommended Modifications

For a discharge rate of 50.0 L/s, the USBR stilling basin Type II was found to be efficient in dissuading velocity while also maintaining the hydraulic jump within the basin's span. When the discharge was raised, however, the Type II basin appeared to perform poorly because of the velocity at the mid-span of the stilling basin (P5) progressively increased since no appurtenances exist in Type II. The baffle block arrangement substantially lowered the velocity in the basin's mid-span. The dimensions of the baffle block should be greater than the minimal dimensions utilized in this experimental study, especially under high discharge conditions such as 100.0 L/s, in order to minimise the velocity up to 1 m/s.

4.0 CONCLUSION

During physical modeling, it was evident that as the discharge increased, so did the velocity. As a response, the stilling basin's function was to minimise the rapid downstream velocity and dissipate energy via hydraulic jump formation. During the physical modeling, it was discovered that the stilling basin model was highly successful in lowering the velocity up to 50.0 L/s discharge as well as stabilizing the location of the hydraulic jump within the basin's span. The stilling basin, however, failed to retain the location of the hydraulic jump where it formed at the end of the stilling basin for discharge cases of 70.0 L/s and 100.0 L/s. Furthermore, in both situations, the velocity at the basin (P5) surged rapidly. This demonstrated that appropriate velocity reduction and energy dissipation did not occur. For discharge situations of 70.0 L/s and 100.0 L/s, modifications to the Type II stilling basin were recommended. Furthermore, constriction, expansion, or curvature should be avoided in chute spillways identical to the dam spillway to limit cross-wave generation and other unfavorable flow behaviors. The use of baffle blocks caused a drop in velocity at P5, notably when adopting the double row baffle block arrangement, which was more effective than the single row arrangement. As a result, using baffle blocks with double row arrangement to facilitate maximum velocity decay was strongly recommended. Moreover, the risk of scouring and cavitation in the stilling basin could be reduced when the hydraulic jump is stabilised and confined within the structure [20].

Conflicts of Interest

The authors declare that there are no conflicts of interest regarding the publication of this paper.

Acknowledgement

The authors wish to acknowledge Universiti Sains Malaysia, Engineering Campus for providing the necessary support in order to carry out the project and its research study.

References

[1] Rong, Y., Zhang, T., Peng, L., & Feng, P. (2019). Three-dimensional numerical simulation of dam discharge and flood routing in Wudu reservoir. *Water*, *11*(10), 2157. https://doi.org/10.3390/w11102157

[2] Razzak Al-Husseini, T. (2015). Experimental study of increasing energy dissipation on stepped spillway. Journal of Kerbala University, 11(1), 87-100.

[3] Hayder, A. M., & Jafar, M. S. (2015). Investigation of energy dissipation in stepped spillway with semicircular steps treads. Asian Transactions on Engineering, 5(3), 1–5.

[4] Ammar, H. K., Isam, M. A., & Zainab, T. (2016). Study the effect of spillway locations on the hydraulic properties of spillway. Ciência e Técnica Vitivinícola, 31(5), 90–106.

[5] Nigam, U., Das, S., & Choudhury, M. R. (2016). Overview of energy dissipators and stilling basins with design aspects of hydraulic jump type energy dissipators. Conference Proc NCIET.

[6] Abdel Aal, G. M., Sobeah, M., Helal, E., & El-Fooly, M. (2018). Improving energy dissipation on stepped spillways using breakers. Ain Shams Engineering Journal, 9(4), 1887–1896. https://doi.org/10.1016/j.asej.2017.01.008

[7] Daneshfaraz, R., & Ghaderi, A. (2017). Numerical investigation of inverse curvature ogee spillway. Civil Engineering Journal, 3(11), 1146–1156. https://doi.org/10.28991/cej-030944

[8] Gu, S., Ren, L., Wang, X., Xie, H., Huang, Y., Wei, J., & Shao, S. (2017). SPHysics simulation of experimental spillway hydraulics. Water, 9(12), 973. https://doi.org/10.3390/w9120973

[9] Orekhov, G. (2018). Hydraulic spillways using the effect of interacting circulation currents. IOP Conference Series. Materials Science and Engineering, 365, 042023. https://doi.org/10.1088/1757-899x/365/4/042023

[10] Hien, L. T. T. (2020). Study the flow over chute spillway by both numerical and physical models. In APAC 2019 Springer Singapore, 845–851. https://doi.org/10.1007/978-981-15-0291-0_116

[11] Ghazi, B., Daneshfaraz, R., & Jeihouni, E. (2019). Numerical investigation of hydraulic characteristics and prediction of cavitation number in Shahid Madani Dam's Spillway. Journal of Groundwater Science and Engineering, *7*(4), 323-332. https://doi.org/10.19637/j.cnki.2305-7068.2019.04.003

[12] Nouri, M., Sihag, P., Salmasi, F., & Kisi, O. (2020). Energy loss in skimming flow over cascade spillways: Comparison of artificial intelligence-based and regression methods. Applied Sciences (Basel, Switzerland), 10(19), 6903. https://doi.org/10.3390/app10196903

[13] Abbas, A. S., Alwash, H. H., & Mahmood, A. H. (2018). Effect of baffle block configurations on characteristics of hydraulic jump in adverse stilling basins. MATEC Web of Conferences, 162, 26–32. https://doi: 10.1051/matecconf/201816203005

[14] Chatila, J. G., & Jurdi, B. R. (2004). Stepped spillway as an energy dissipater. Canadian Water Resources Journal, 29(3), 147–158. https://doi.org/10.4296/cwrj147

[15] Yang, C. S., Kao, S. -P. &., Lee, F. B., & Hung, P. -S. (2004). Twelve different interpolation methods: A case study of Surfer 8.0. In Proceedings of the XXth ISPRS Congress, 35, 778–785.

[16] Li, Q., Li, L., & Liao, H. (2018). Study on the best depth of stilling basin with shallow-water cushion. Water, 10(12), 1801. https://doi.org/10.3390/w10121801

[17] Ahmed, S. S., & Aziz, Y. W. (2018). Evaluation of hydraulic performance of Nazanin dam side channel spillway. Zanco Journal of Pure and Applied Sciences, 30(1), 62-69. https://doi.org/10.21271/ZJPAS.30.s1.7

[18] Nunes, A. F. P. (2017). Computational modelling of skimming flow over stepped spillways with sidewall convergence.

[19] Dehdar-Behbahani, S., & Parsaie, A. (2016). Numerical modeling of flow pattern in dam spillway's guide wall. Case study: Balaroud dam, Iran. Alexandria Engineering Journal, 55(1), 467-473. https://doi.org/10.1016/j.aej.2016.01.006

[20] Mahtabi, G., Chaplot, B., Azamathulla, H. M., & Pal, M. (2020). Classification of hydraulic jump in rough beds. Water, 12(8), 2249. https://doi.org/10.3390/w12082249